Network Diagrams – Technical Description

The following diagrams show fiber routes, equipment used, and network connectivity that will provide a highly resilient network architecture capable of maintaining services for the vast majority of customers in almost all fiber cut as well as power and/or equipment failure scenarios.

Network resiliency is addressed on many levels:

- The network itself will have multiple geographically divers interconnect points to and from the internet.
- These interconnection points are accessible to both of the fiber ringed network architectures detailed below.
- Each equipment hut in the network will be capable of providing service for up to a minimum of 24 hours during a power failure.
- Lit services will be protected by the various fiber ring configurations demonstrated in the diagrams below.
- Dark fiber customers will be able to choose amongst several possible combinations of fiber paths to create their own fiber ringed network architecture.

Diagrams below illustrate initial network connectivity for the network as a whole as well as East and West fiber ring configurations that will be created to provide fault tolerance for our lit service offerings. Note that lit services are available from any Cienna 5171 Switch located on the network.

The colored routes shown in the following key apply to all fiber route diagrams below:

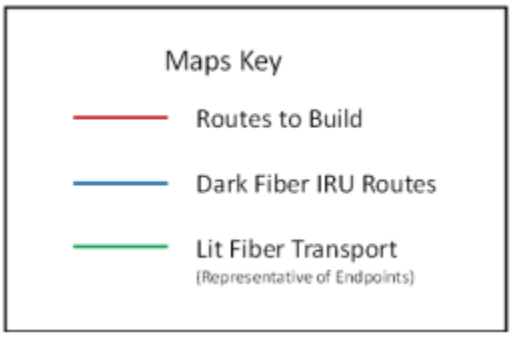

Whole Network Fiber Routes

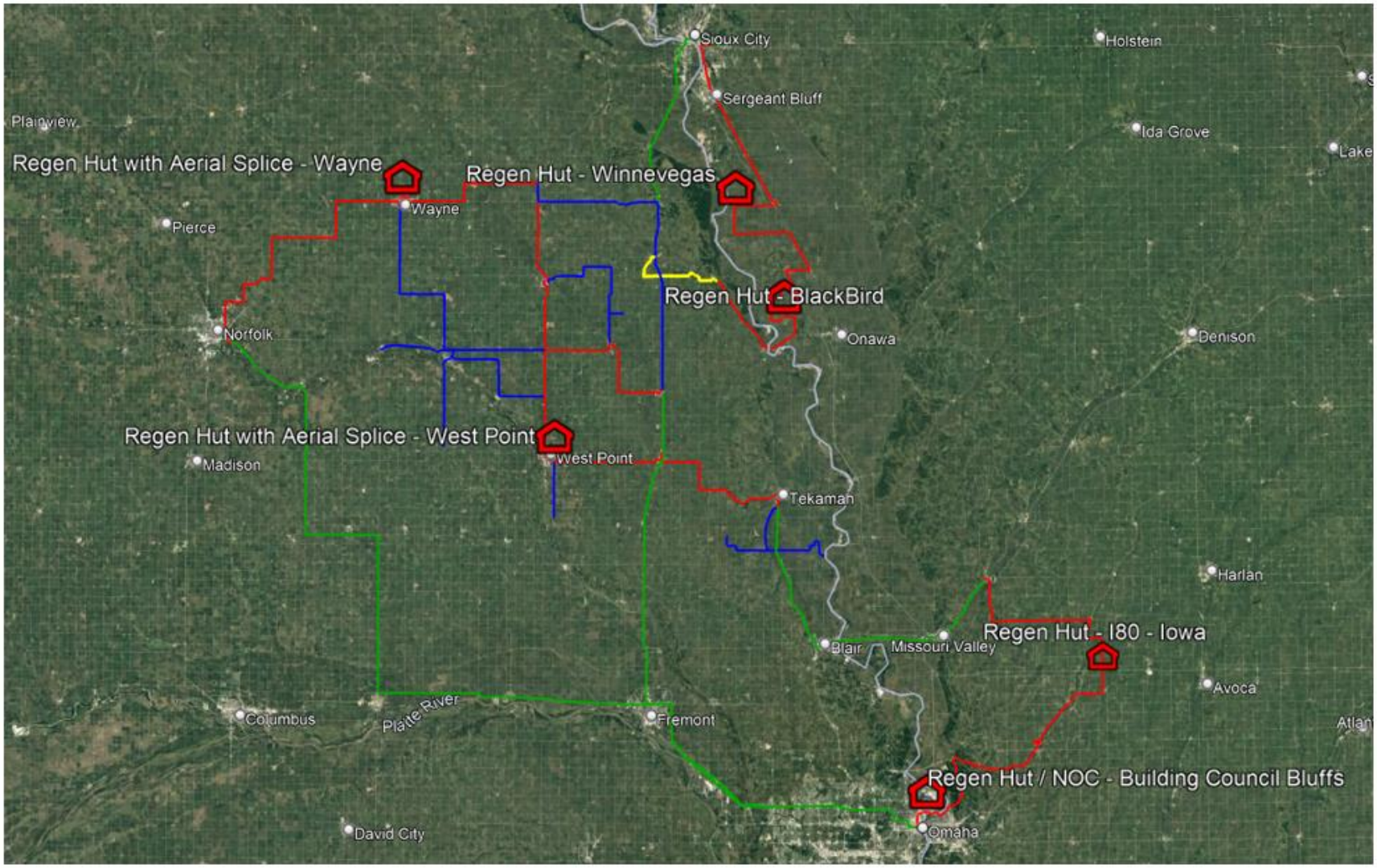

Figure 1: Fiber Routes for Entire Network

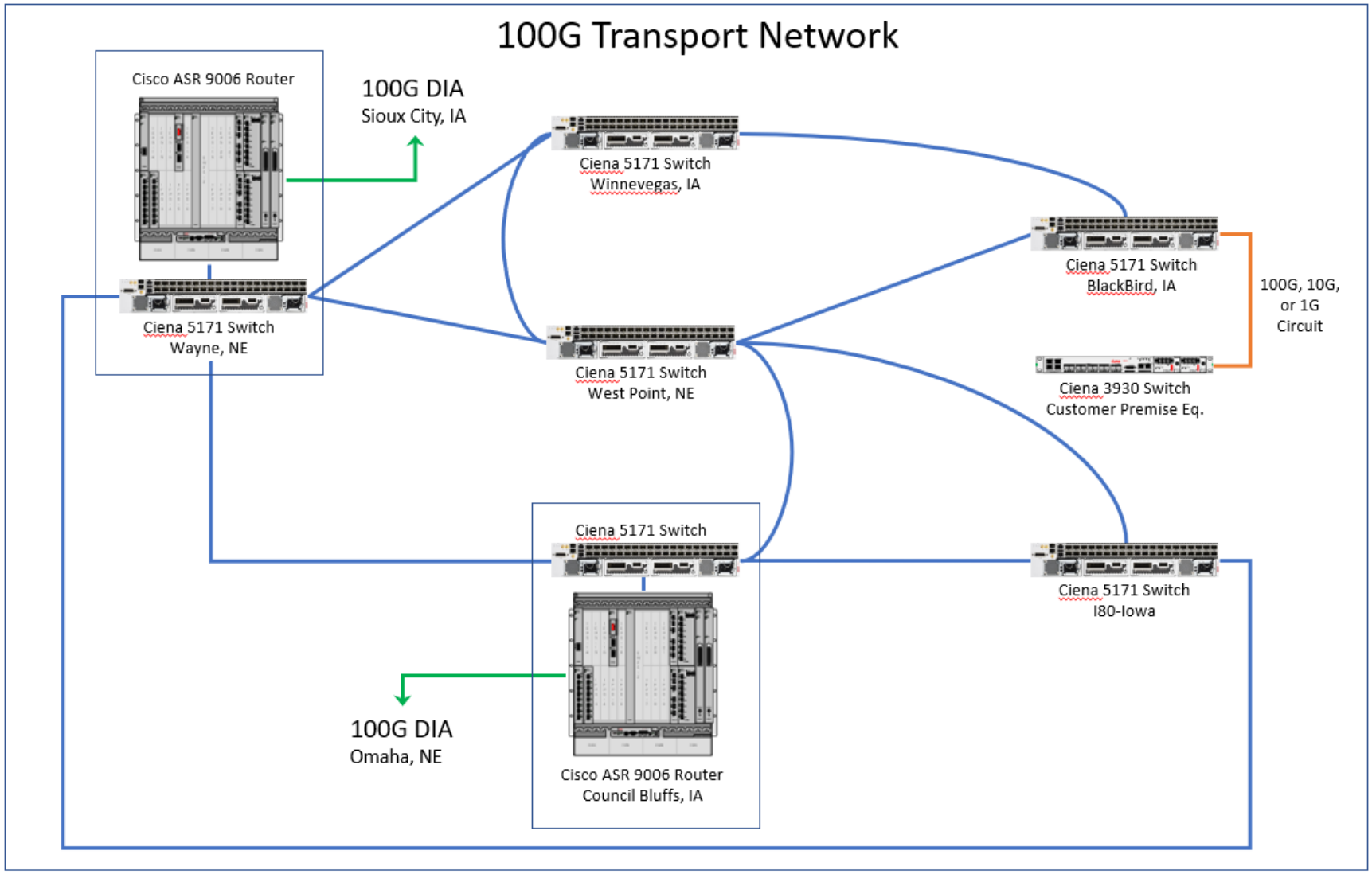

Figure 2: Entire Network Lit Service Connectivity

East Fiber Ring Routes

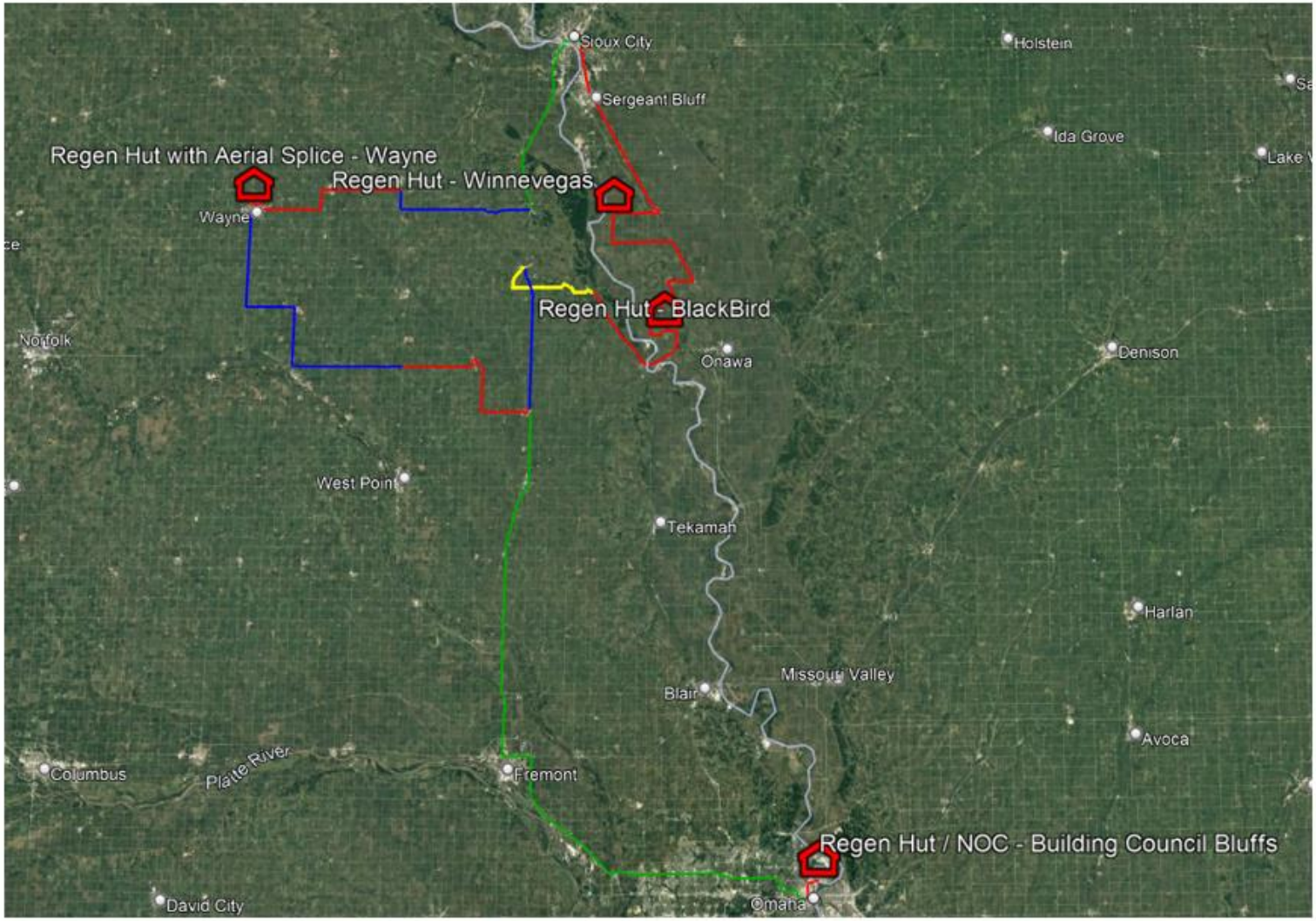

Figure 3: Fiber Routes - East Fiber Ring

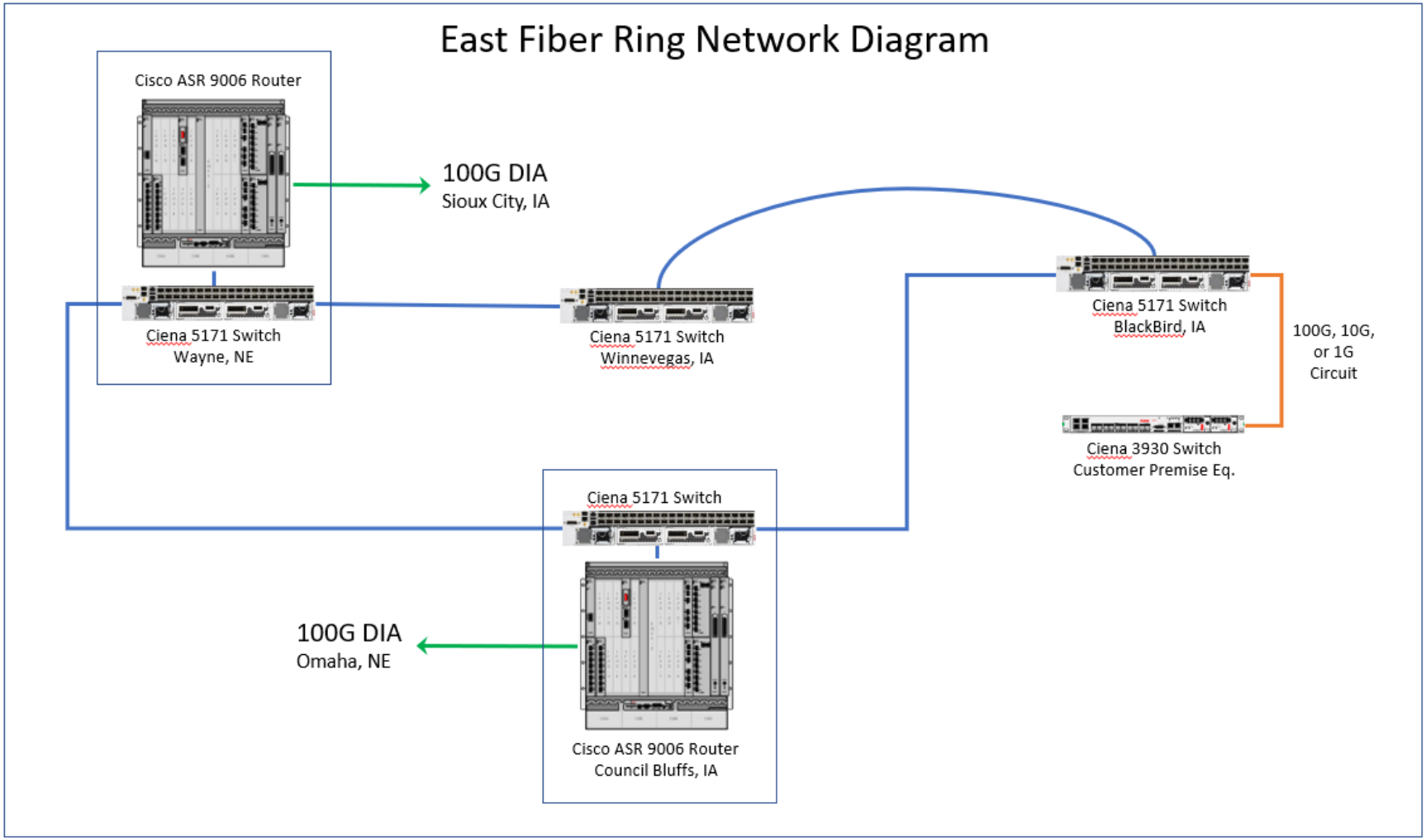

Figure 4: East Fiber Ring - Lit Service Connectivity

West Fiber Ring Routes

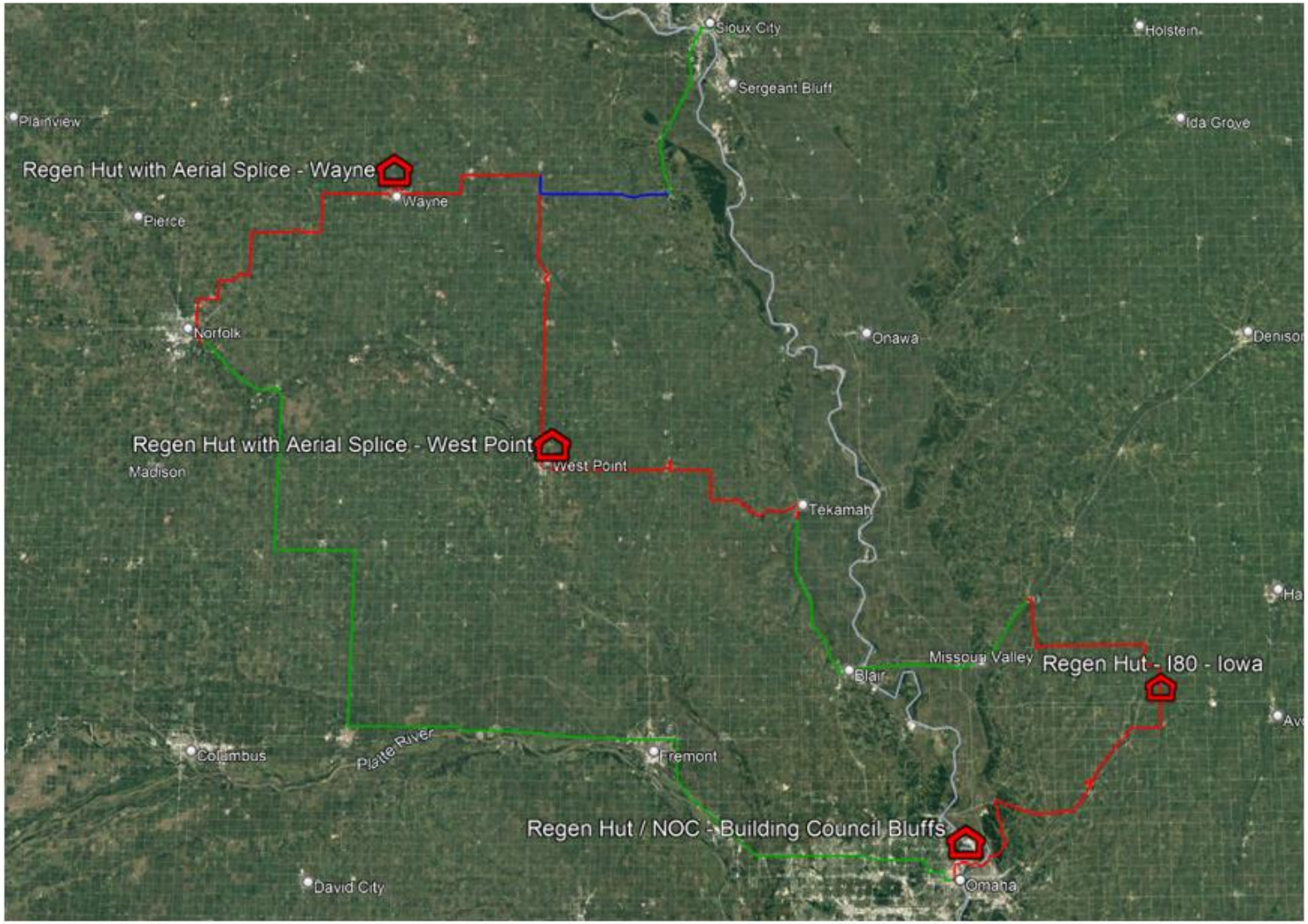

Figure 5: Fiber Routes - West Fiber Ring

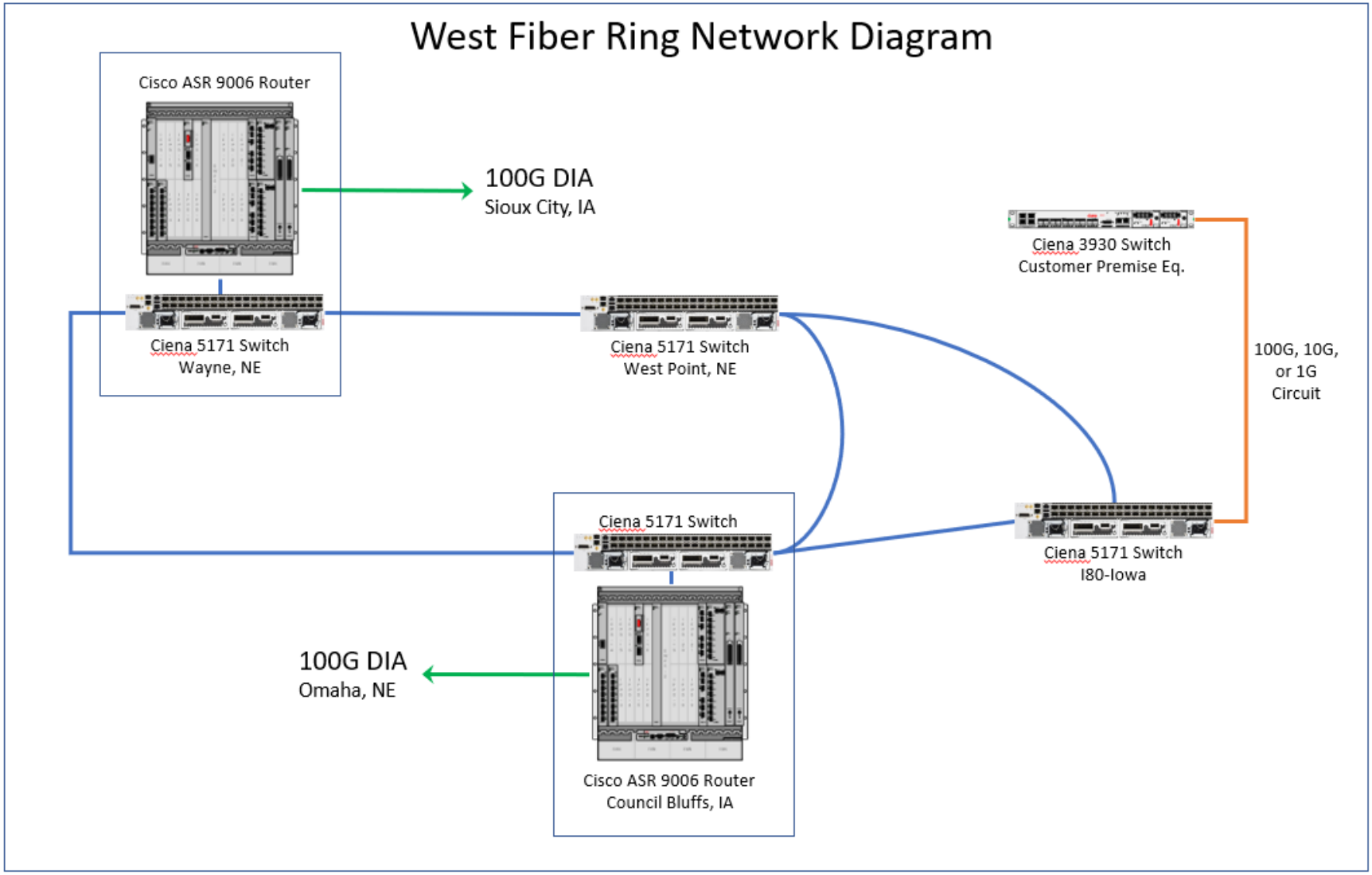

Figure 6: West Fiber Ring - Lit Service Connectivity